dooch

XR/DRL/XRL/XRLP Series

Vertical Multi-Stage Centrifugal Pump

Operation Instruction Manual

www.doochpump.com.cn

XR/DRL/XRL/XRLP_2022.11

Shanghai Sino-Korea Dooch Pump Manufacture Co., Ltd.

No.239 ZhangLiantang Road, Liantang Industrial Park,Qingpu District,Shanghai City,China.

Tel: +86.21.67679390 Fax: +86.21.67679396

Contents

1 Confirmation Items

After pump arrive to the site, need to confirm following items first：

1.1 Remove the package, to confirm the model number if matches with the nameplate and purchase order. (Nameplate position see below), and confirm the correct electrical and earth connection to prevent any accident caused. Nameplate as shown below:

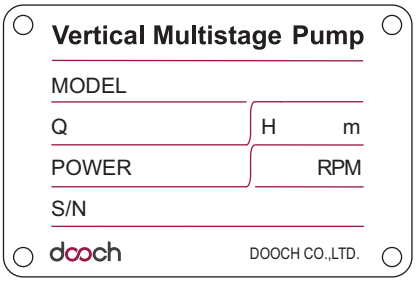

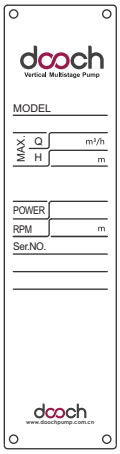

1.2 Lifting and Hoisting

When lifting the pump, Locks or Belts must be used and bolted to the brackets as shown in the figure.

Caution: Do not use the lifting screws on the motor when lifting the pump. Use lifting screws only when separating the motor and pump.

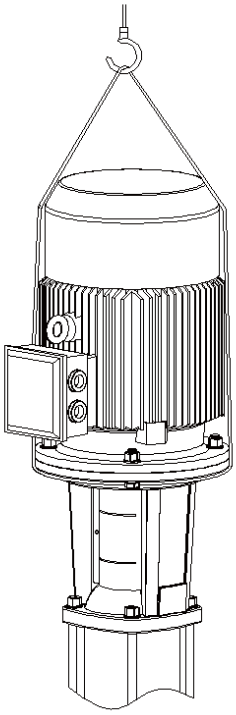

1.3 To check if there is any damage during the transportation and confirm whether the nut is loose during transportation.

2 Definition of Model

2.1 Model definition for XR/DRL/XRL/XRLP 1，2，3，4，5，10，15 and 20

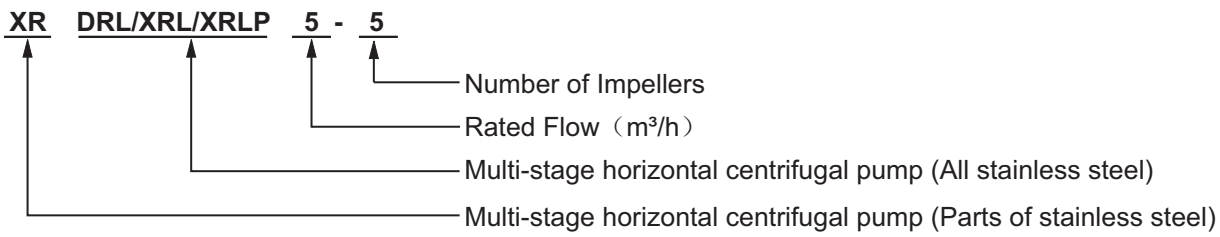

2.2 Model definition for XR/DRL/XRL/XRLP 32，45，64，90，95，125，155，185，215 and 255

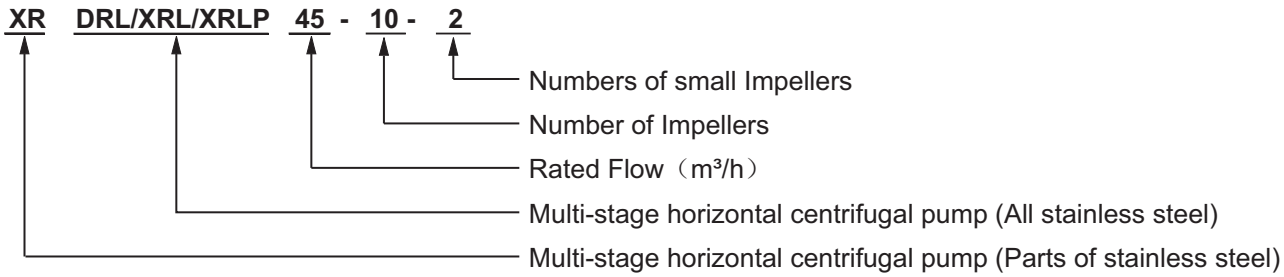

3 Application Fields

1）Apartments, Building water supply, Boiler feeding water and Fire-fighting pump fields.
2）Apartment water heating system circulation pump.
3）Water supply system for liquid delivery and booster pump.
4）Industrial equipment system of liquid circulation, transportation and pressurization.
5）R/O filter equipment used as for ejector.
6）Manufacturing engineering equipment, high pressure washing equipment, beverage production equipment and other pumps.

Transferred Liquid by Pump
1) Thin, clean and non-flammable liquids, free of solid particles and fibers.
2) To ensure pumped liquid will not chemically cause the pump material to be corrosive.
3) If all the Equipment system material made by stainless steel which components in contact with liquid, DRL/X-RL/XRLP model pump recommended to apply.
4) If the specific gravity or viscosity of the conveying medium is higher than water, please contact the manufacturer, to recalculate the motor power according to the specific gravity and viscosity.
5) The material of the O-ring and mechanical seal is selected in consideration of the nature of the medium.

4 Technical Data

4.1 Ambient Temperature and Altitude
1）All these type of pump's ambient temperature is from +5 ℃ to +40 ℃, the maximum altitude of 1000m, if the ambient temperature exceeds the above temperature or pump installed above the maximum altitude, the motor must not be fully loaded run, otherwise will cause the danger of overheating.
2）Overheating is mainly caused by overheating of ambient temperature or low air density leading to poor motor cooling effect. In this case, higher power motor should be selected.

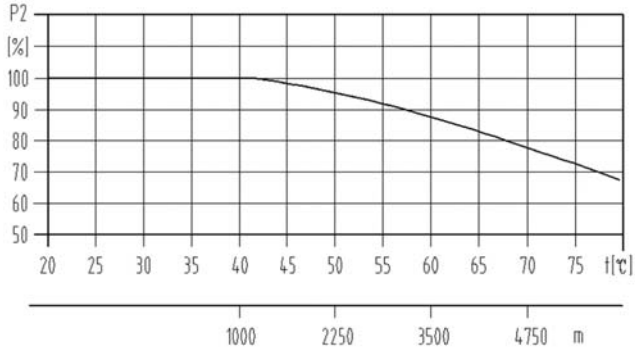

Motor output power (percentage) and the relationship between ambient temperature and altitude

3) If both the maximum temperature and the maximum altitude exceed the allowable range, the percentage of output power of motor reduction should be calculated by times of two numbers.

4.2 Minimum Inlet Pressure

The maximum suction in meters can be calculated by following formula:

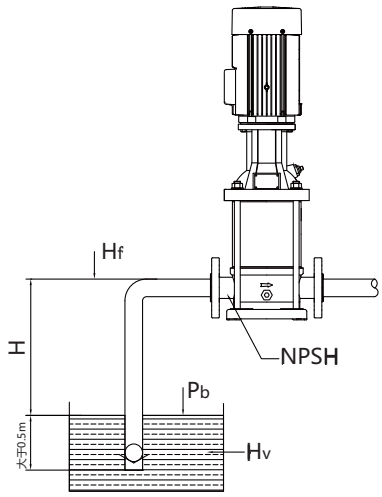

$$H = P_b \times 10.2 - NPSH - H_f - H_v - H_s$$

P_b =Atmospheric pressure in bar

$NPSH$ =Pump's NPSH can be read from the pump's maximum flow rate in the performance curve marked in the catalogue.。

H_f =Friction loss in the water inlet pipe at the maximum flow rate required by the pump

H_v =Gasification pressure of the transport medium at service temperature

H_s =Safety margin, to take 0.5 meters as the smallest

If the calculated H is a positive number, the maximum suction head is H meters allowed when the pump is running .

If the calculated H is negative, the inlet pressure is required to reach at least H meters.

4.3 Maximum Inlet Pressure

The maximum allowable inlet pressure for the pump is stipulated on page 04 in the catalogue.

4.4 The Temperature of the Conveying Medium.

Pump's conveying medium temperature range from -15 ℃ to +110 ℃. If the ambient temperature exceeds from +5 ℃ to +40 ℃ range, must be specified in the order contract, and in accordance with the requirements of the motor grease, to fill into the grease to lubricate the motor.

5 Installation Procedures

When installing the pump, the pump must be drilled on a horizontal, smooth and hard foundation and bolted, and to install according to the following procedure.

Step 1

To confirm the direction of suction and discharge of the medium from the arrow marked in the body of bottom casing.

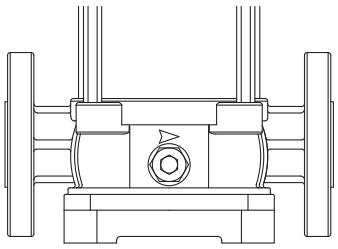

Step 2

To check the pump catalogue, to determine the distance between the pump suction and discharge, center height, size and distance of anchor bolt and other parameters, the pipeline and the foundation must be matched with the size which stipulated in the catalogue

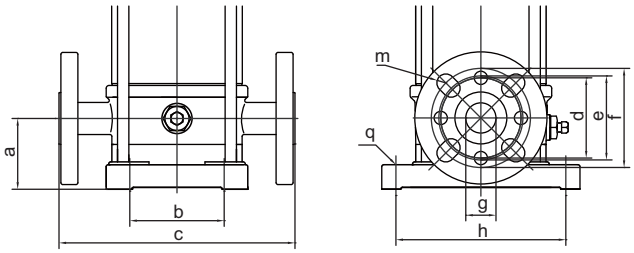

Step 3

Pump installed as shown, but the motor cannot be installed below the installation level, also cannot be upside-down installation.

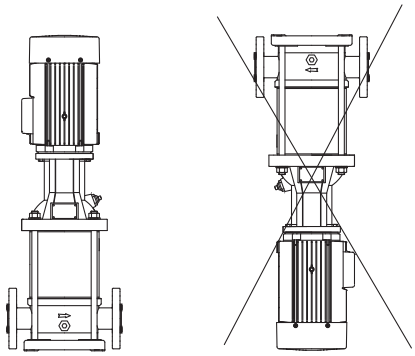

Step 4

In order to reduce noise, it is advisable to install expansion joints on both ends of the pump. Install isolation valves at each end of the pump to prevent system discharge when pump clean, maintenance, and replacement are required.

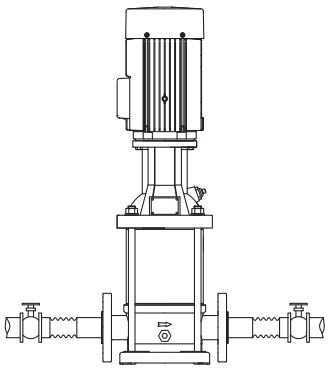

Step 5

Ensure no cavitation happened during pipe installation, especially on the suction side of the pump.

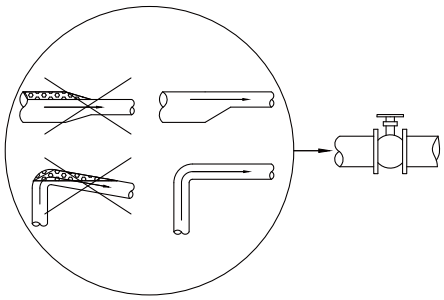

Step 6

If installation appeared one of the following features, install a vacuum valve near the pump.

1）The discharge line slides down in the direction away from the pump.

2）Siphon phenomenon may be occurred.

3）Necessary to stop the backwash of unclean water.

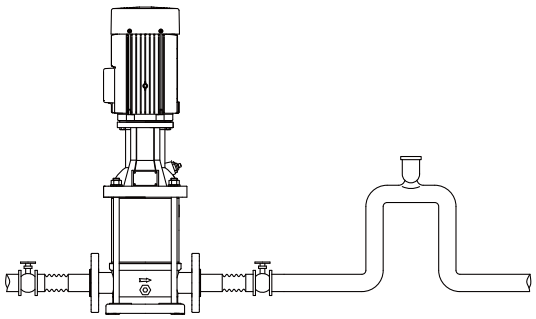

5.1 Foundation

We recommend installing the pump on a concrete foundation, which must be sufficient to provide a permanent, consistent support of the pump as a whole. The foundation must be able to absorb vibration, normal stress or impact. The concrete foundation must be horizontal and the surface flat, with the pump on the foundation, the floor must be fully supported.

The explanation of the length, width, height of foundation:

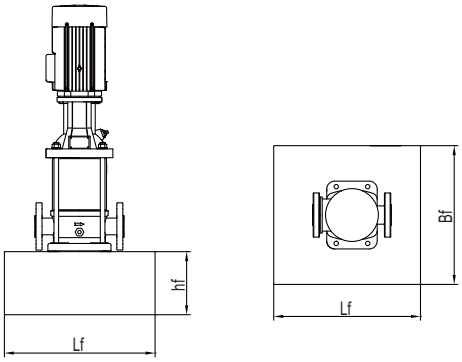

For the pump model whose motor power ≤30Kw,The length and width of foundation must be over 200 mm than the pump base. For the pump model whose motor power ≥37Kw, The length and width of foundation must be 1.5m X1.5m.The basic weight must be 1.5 times bigger than the total weight of the pump. The minimum height of the foundation can be calculated based on the concrete weight, density, and foundation length and width.

$$h_f = \frac{m_{pump} \times 1.5}{L_f \times B_f \times б}$$ Concrete density б usually calculated based on 2200kg/m³

The installation in noise-free environment is particularly important; it is recommended that foundation weight should be 5 times bigger than the pump weight. After the foundation bolts placed, the pump can be placed on a foundation and, if necessary, leveled with a gasket at this point to hold the water pump in a completely horizontal position.

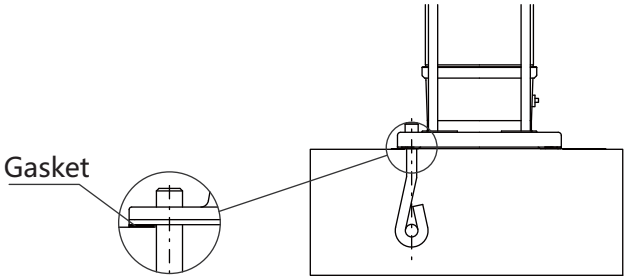

5.2 Damping to Reduce Vibration

If damping is used, the shock absorber must be mounted underneath the foundation. Install the shock absorber as shown below picture for motor power ≤30kW.

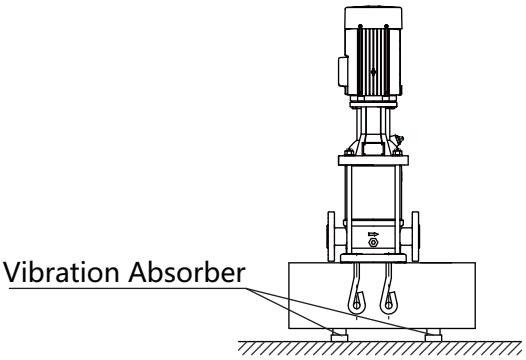

For motor power≥37kW as shown in the below picture,One Sylomer pad or Vibration pad recommended to use.

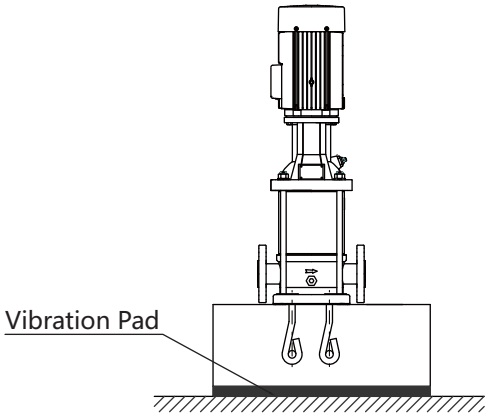

5.3 Outdoor Installation

For outdoor installation, a rain shelter should be used to cover and protect the motor and pump.

5.4 Tightening Torque and Torsion

The following table explains the bolt torque on the anchor bolts and flanges.

XR,DRL,XRL,XRLP	Anchor Bolt [Nm]	Flange Bolt [Nm]
1 to 5	40	60
10 to 20	50	100
32 to 95	70	150
125，155	160	200
185，215，255	190	250

5.5 Flange Torsion and Torque

Torsion				
Flange，DN[mm]	XR,DRL,XRL,XRLP	Torsion, Y Direction [N]	Torsion, Z Direction [N]	Torsion, X Direction [N]
25/32	1 to 5	760	1170	780
40	10	1000	1250	1100
50	15 to 20	1350	1650	1500
65	32	1700	2075	1875
80	45	2050	2500	2250
100	64 to 95	2700	3350	3000
150	125 to 155	2700	3350	3000

Torque				
Flange，DN[mm]	XR,DRL,XRL,XRLP	Torque，Y Direction [Nm]	Torque，Z Direction [Nm]	Torque，X Direction [Nm]
25/32	1 to 5	820	970	1220
40	10	900	1050	1300
50	15 to 20	1000	1150	1400
65	32	1075	1225	1500
80	45	1150	1300	1600
100	64 to 95	1250	1450	1750
150	125 to 155	1250	1450	1750

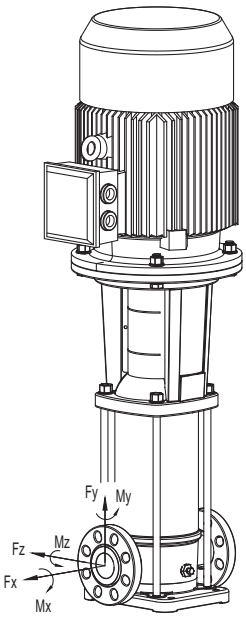

5.6 Installation Precautions

1）Motor should be installed in a ventilated, dry, ice-free place.

2）In order to facilitate the pump and motor maintenance, there should allow sufficient space, For the motor power ≤34kW , pump should be leaved more than 500mm space. For the motor power ≥5.5kW , pump should be leaved more than 1 meter's space.

3）During the Pipeline installation, pipe weight, valve weight, and weight of pipe fittings cannot be withstood on the pump, pipe and pump joints to use seals for sealing.

4）If need to install pressure gauge and flowmeter, the pump inlet and outlet pressure measurement points are generally located in the import flange upstream and downstream of the outlet flange twice the pipe diameter distance, the upstream of the electromagnetic flowmeter straight pipe length should be greater than 5 times Pipe diameter distance; the downstream straight pipe length should be 3 times bigger than the pipe diameter distance; measuring point 4 times the pipe diameter distance, No any elbow should be existed.

● 6 Electrical Connection

6.1 Precaution Notices

1）The electrical connection must be operated by authorized electrician in accordance with local regulations.

2）Before removing the terminal cover to prepare for wiring or before disassembling and disassembling the pump, make sure that the power supply has been cut off and will not be accidentally connected.

3）The pump must be connected to the mains frequency power switch.

4）The operating voltage and frequency are marked on the motor's nameplate to ensure compatibility between the motor and the power supply and to ensure that the motor terminal box is properly wired. The wiring diagram can be found in the terminal box.

5）The pump equipped with frequency converter or electric control cabinet, should follow the instructions manual provided.

6.2 Junction Box Position

The junction box can be adjusted to four different positions in 90° steps. Follow these steps below:

1）Remove the protection cover in case of need, Couplings must not be removed.

2）Remove the bolts which fixed the motor and the pump body.

3）Turn the motor to the desired position.

4）Reinstall bolts and tighten.

5）Install the coupling protection cover.

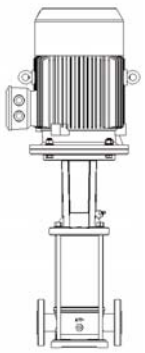

6.3 Standard assembled water pump, The motor terminal box position is shown as following:

● 7 Pump Start and Stop

7.1 Pump Start

1）Before starting the pump, confirm again whether the nut is loose during transportation and installation. Loose nut may cause safety accidents.

2）Turn around the pump coupling.,The pump turning should be flexible and no any noise.

3）Be sure to install the protective cover before starting the pump.

4）Pump starting procedures should be according to the following steps of instructions.

Step 1
To close the isolation valve in the discharge/outlet side,To open the isolation valve in the suction side.

Step 2
Remove the water diversion plug and slowly fill into the water pump until full filled and tighten it.

Step 3
Check the correct direction of pump rotation from the motor cover.

Step 4
Check the rotation direction, To start pump.

Step 5
Degas the pump through the bleed valve. At the same time, slightly open the isolation valve in the discharge side.

Step 6
The water pump continues to degas, and at the same time, slightly open isolation valve larger in the discharge side.

Step 7
After seeing the liquid flow out smoothly from the purge valve, close the air vent valve and fully open the isolation valve in the discharge side .

Step 8
Other questions if have, please contact the manufacturer or authorized dealer.

Precautions:

1）During the pump exhaust and water diversion, pay attention to the water spray, do not damage people or other equipment around.

2）After starting the pump, use isolation valve in the discharge side to adjust the performance of the pump and Do not use the isolation valve in suction side. During pump running, the isolation valve in the suction side remains fully opened all the time.

3）The pump is prohibited to run at excess of specified flow rate.

7.2 Stop the Pump

Before stop the pump, first close isolation valve in the discharge side, then turn off the pump power, and finally close isolation valve in the suction side.

8 Pump Disassembly and Assembly

Precautions:

1）When the pump fails, performing maintenance, or replacing the shaft seal and motor, the pump must be disassembled and assembled by following the instructions below.

2）The location and name of the water pump parts are shown in the exploded view.

8.1 Precautions Before Disassemble

1）Disconnect the motor from the power supply before disassembly, close the isolation valves on both sides of the pump and drain the pump.

2）Electrical operation regulations must be followed when removing cables.

3) Pay attention to the center of pump gravity before disassembling to avoid dumping. Especially pay attention to the center of gravity of those pump which have many stages with high motor power.

4）Before disassembly, be sure to prepare the tools for maintenance and new spare parts for replacement.

8.2 Motor Replacement

8.2.1 Disassemble

1）Remove the Cross recessed bolt and remove the protective cover.

2）Remove the Hex socket head cap screw and remove the coupling and pin.

3）Disconnect the bolts connecting the motor and bracket.

4）Lift the motor from the pump head. When lifting the motor, make sure that the motor is raised vertically to avoid damaging the motor and the pump stop position.

8.2.2 Assembly

1）Assemble the motor onto the pump head.

2）Install bolts and tighten symmetrically.

3）Insert the pin into the shaft pin hole (if any), lift the pump shaft to a certain height, and insert the mechanical seal sheet into the mechanical seal.

4）Fit the coupling to the pump shaft. The holes on the coupling must be aligned with the pins (if any) and the screws installed.

5）Tighten the screws symmetrically. When tightening the screws, ensure that the clearances on both sides of the two couplings are equal. Unplug the mechanical seal sheet.

6）To install the protective cover and tighten the Cross recessed bolt.

8.2.3 Screw specifications and torque, see the following table:

Name	Quantities	Specification	Torque [Nm]	Remarks
Bracket bolt	4	Hex Screw M6	10	Motor Power 0.37～1.1Kw
		Hex Screw M8	12	Motor Power 1.5～4Kw
		Hex Screw M10	20	Motor Power 5.5～7.5Kw
	4 or 8	Hex Screw M16	80	Motor Power 11～90Kw
	8	Hex Screw M20	150	Motor Power 110Kw
Coupling screws	4	Hex Socket Head Cap Screw M6	13	Motor Power 0.37～1.1Kw
		Hex Socket Head Cap Screw M8	31	Motor Power 1.5～4Kw
		Hex Socket Head Cap Screw M10	85	Motor Power 5.5～45Kw
		Hex Socket Head Cap Screw M16	100	Motor Power 55～110Kw
Protective cover screws	2 or 4	Cross recessed bolt M5 or M4	2	

8.3 Replacement of Mechanical Seal

8.3.1 Disassemble

1）For the pump model of DRL, motor power for 7.5Kw and below, need to disassemble the motor and coupling, For pump motor of 11Kw and above, just to disassemble the coupling.

2）For the pump mode of XRL and XR,just to disassemble the coulpling,Please refer to 8.2.1

3）Unscrew the screws fasten the mechanical seal, remove the mechanical seal cover (if any), and loosen the three sets of screws on the mechanical seal.

8.3.2 Assembly

1）Clean shaft ends with clean gauze,No any burrs and debris.

2）Infiltrate the shaft end with lubricate oil and press the mechanical seal firmly onto the pump cover.

3）Install the mechanical seal fixing cover(if any), tighten the screws, and tighten the three set screws on the seal, torque 2.5 Nm, lift the pump shaft to a certain height, and install the mechanical seal sheet.

4）Install the motor and coupling,See 8.2.2.

8.4 Disassembly and assembly of main components of water pump

8.4.1 Disassembly

1）Disassembly the coupling, motor and mechanical seal .refer to 8.3.1.

2）Disassembly the nut and washer in the tie rod.

3）Use rubber hammer to knock the side of bracket, to remove bracket down.

4）Remove the pump cover (if any) and remove the cylinder. As there is an O-ring between the cylinder and the pump cover, between the cylinder and the inlet and outlet chamber, there may adhere to each other between the cylinder and the pump cover, cyliner and inlet and outlet water side r. At this time, the rubber hammer can be used to knock the cylinder left and right to remove it.
5）To lift up all the components in the cylinder from the pump chamber.

8.4.2 Assembly
1） O-rings are soaked with grease and assembled into the grooves in the inlet and outlet sections.
2）Assemble the components into the inlet and outlet chamber.
3）Install the cylinder on the inlet and outlet chamber and press the cylinder firmly to the end.
4）Soak the O-ring with grease and fit it into the groove of the pump cover.Fit the wave spring/rubber spring/compression spring sheet into the groove of the pump cover.
5）Install the bracket, the tie rod washer , the tie rod nut, and tighten the nuts symmetrically. Torque see table:
6）Install the brackets, washers, nuts, and tighten the nuts symmetrically. XR/DRL/XRL/XRLP 1~5 Tooque 60Nm.
7）Assembly the mechanical seal, Coupling and Motor. Please refer to 8.3.2Chamber components assembly

Model	Tie rod nut	Torque[Nm]
XR/DRL/XRL/XRLP 1～5	M12	60
XR/DRL/XRL/XRLP 10～90	M16	100
XR/XRL/XRLP 95	M16	160
XR/XRL/XRLP 95	M20	320
XR/XRL/XRLP 125/155	M20	320
	M24	625
XR/XRL 185/215/255	M30	900

8.4.3 Assembly of cavity componentsz
For pump model 1~5 Ton
1）Fix the pump shaft with the pin hole end down and fix it on special toolings.
2）According to the pump model, number of stages, in accordance with a certain order, the impeller, diffusers, spacers and other components mounted on the pump shaft.
3）Tighten the non-metallic insert hex nut with a torque of 18 Nm. turning the pump shaft after assembly, it should be flexible, no abnormal sound, and there is a certain amount of enthalpy before and after.

For pump model 10~20 Ton
1）Fix the pump shaft with the pin hole end down and fix it on special toolings.
2）According to the pump model, number of stages, in accordance with a certain order, the impeller, diffusers, spacers and other components mounted on the pump shaft.
3）Tighten the non-metallic insert hex nut with a torque of 18Nm.
4）Turning the pump shaft after assembly, it should be flexible, no abnormal sound, and there is a certain amount of enthalpy before and after

For pump model 32~255 Ton
1）Put the diffuser base on the assembly table. Put the first stage impeller and the pump shaft on the diffuser base and fix it. Install the cone sleeve and tighten the nut of the first-stage impeller. Torque from 32 to 95 m3/h: 85Nm, 125～155 m3/h: 180Nm. 185～255 m3/h: 300Nm.

2）According to the pump model and number of stages, install the impeller, diffuser, top diffuser and other parts on the pump shaft in order, and tighten the impeller nut. Torque from 32 to 95 m3/h: 85Nm, 125～155 m3/h: 180Nm. 185～255 m3/h: 300Nm.

3）Install the fastener and tighten the screws symmetrically, torque:15Nm.

4）Rotate the pump shaft after assembling, it should rotate flexibly, without abnormal noise, and there is certain space in front and behind.

9 Regular Maintenance

1）When maintenance and repair the pump, make sure all power shut down and will not be inadvertently connected.

2）After Three months of pump continuous operation, pump should be observed if any performance degradation, noise and others problems, if necessary, to replace the wearing parts.

3）If motors with grease filling hole, should be filled regularly with grease.

10 Frost and Frozen Protect

1）If not use a pump during the frost and frozen season, water inside the pump should be empty, to prevent damage.

2）When emptying the pump, loosen the air vent valve and open the drain valve in the suction and discharge side.

3）When discharging, pay attention to the direction of the water spray, to ensure not cause any harm to personnel and equipment.

4）Do not tighten the air vent valve and install the drain valve until the pump is used again.

11 Trouble-Shootings

Precautions：

1）Before removing the terminal box cover or before disassembling the water pump, make sure that the power supply cut off and cannot be accidentally switched on.

Malfunctions	Reasons	Trouble-Shooting
1.Motor does not run at startup	a) Power Supply failure	To check power supply
	b) Fuse blown down	Fuse change
	c) Motor protector fault	Technician Consulting
	d) Control system failure	Technician Consulting
	e) Damage of Motor	Motor change
2.Abnormal noise	a) Cavitation happen	Check the suction conditions
	b) Coupling anomaly	Readjustment coupling
	c) Ground un-balanced or bolts loose	Check ground and tight bolts
	d) Motor bearing damage	Change motor bearing
	e) Pump bearing damage	To clean pump

Malfunctions	Reasons	Trouble-Shooting
3.Pump running without water	a) Suction pipe/pump blocked by debris	To clean pump
	b) Bottom valve or check valve is stuck in closed position	Repair bottom valve or check valve
	c) Suction pipe leakage	Repair suction pipe
	d) Air in the suction pipe or pump	Check suction conditions
	e) Wrong direction of pump rotation	Check direction
4.Abnormal pump performance	a) Cavitation happen	Check suction conditions
	b) Suction pipe &pump blocked by debris	To clean pump
	c) Air sucked by pump	Check suction conditions
	d) Small pipe diameter	Change pipe
5.Pump leakage	a) O-ring damage between cylinder and inlet/outlet chamber	Change O-ring
	b) O-ring damage between cylinder and pump cover	Change O-ring
	c) Mechanical seal damaged	Change new mechanical seal
	d) Air vent valve not tightened closely	To tighten air vent valve closely

• 12 Picture 1 Exploded View for Model XR/DRL/XRL/XRLP 1、2、3、4、5

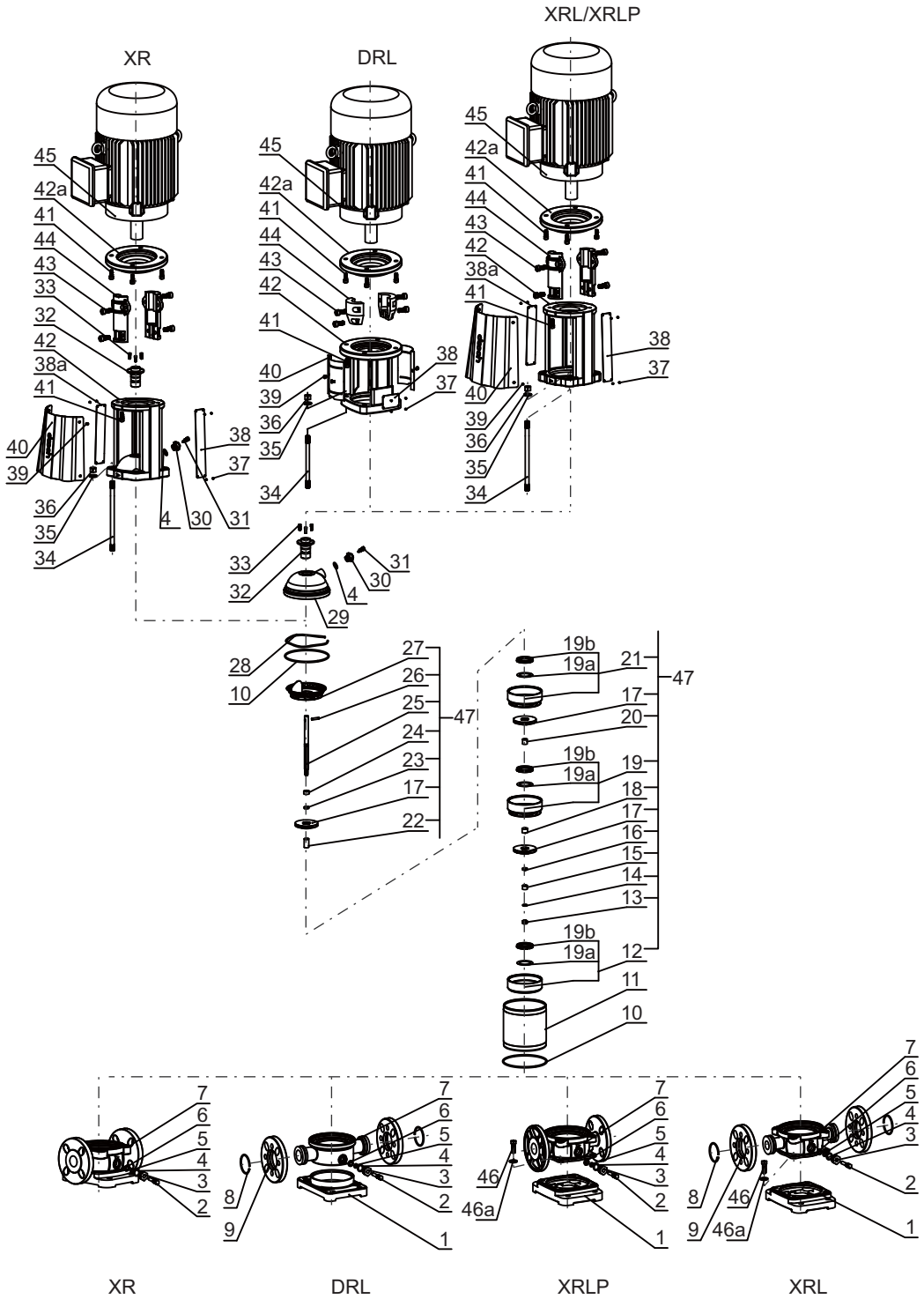

1.Base
2.Drain valve core
3.Drain valve seat
4.O-ring
5.O-ring
6.O-ring retainer
7.Bottom casing
8.Ring flange
9.Flange
10.O-ring
11.Cylinder
12.Top diffuser
13.Hex nut non-metal M8
14.Lock washer
15.Washer compression
16.Spacer 15x4
17.Impeller
18.Bearing cone
19a.Sealing ring
19b.Sealing Ring Cover
19.support diffuser
20.Spacer 15x14
21.Diffuser
22.Spacer 15x26
23.Spacer 15x4
24.Positioning bush
25.Shaft
26.Shaft pin
27.Top diffuser
28.Wave spring
29.Top casing
30.Air vent valve seat
31.Air vent valve core
32.Mechanical seal
33.Hex socket head cap screw
34.Tie rod
35.Washer 12
36.Nut M12
37.Rivet
38.Name plate
39.Cross recessed bolt
40.Coupling cover
41.Bolt
42.Bracket
42a.over flange(for motor 5.5/7.5kw)
43.Hex Socket head Cap screw
44.Coupling
45.Motor
46.Hex bolt
46a.Washer
47.Parts in cylinder

● 13 Picture 2 Exploded view for Model XR/DRL/XRL/XRLP 10、15、20

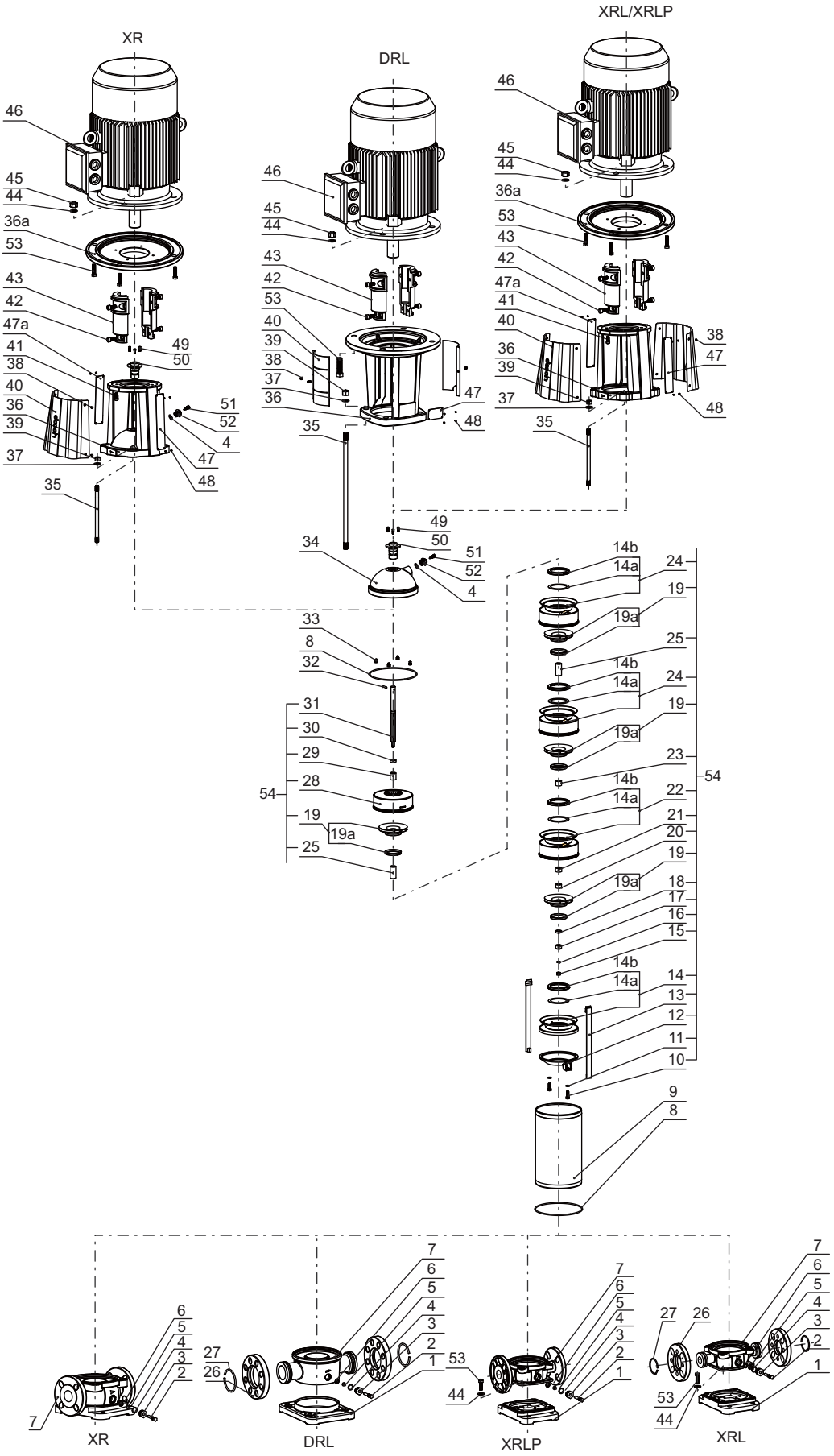

1.Base
2.Drain valve core
3.Drain valve seat
4.O-ring
5.O-ring
6.Retainer
7.Bottom casing
8.O-ring
9.Cylinder
10.Hex bolts M8
11.Washer 8
12.Diffuser base
13.Tie strap
14.Top diffuser
14a.Seal ring
14b.Seal ring cover
15.Hex nut non-metal M8
16.Lock washer 8
17.Washer compression
18.Spacer
19.Impeller
19a.Impeller ring(DRL 10 no ring)
20.Spacer
21.Bearing cone
22.Support diffuser
23.Spacer
24.Diffuser base
25.Spacer
26.Flange
27.Flange ring
28.Top diffuser
29.Spacer
30.Positioning sleeve
31.Pump shaft
32.Cylindrical pin
33.Rubber spring
34.Top casing
35.Tie rod
36.Bracket
36a.over flange
(used in 11kW and above motor)
37.Washer
38.Cross recessed bolt
39.Nut M16
40.Coupling cover
41.Hex socket head cap screw
42.Hex socket head cap screw
43.Coupling cover
44.Washer
45.Nut
46.Motor
47.Nameplate
47a.Model mark
48.Rivet
49.Hex Socket head Cap screw M5x12
50.Mechanical seal
51.Air vent valve cone
52.Air vent valve cone
53.Hex bolts
54.Parts in cylinder

14 Picture 3 Exploded view for Model XR/DRL/XRL/XRLP 32~90

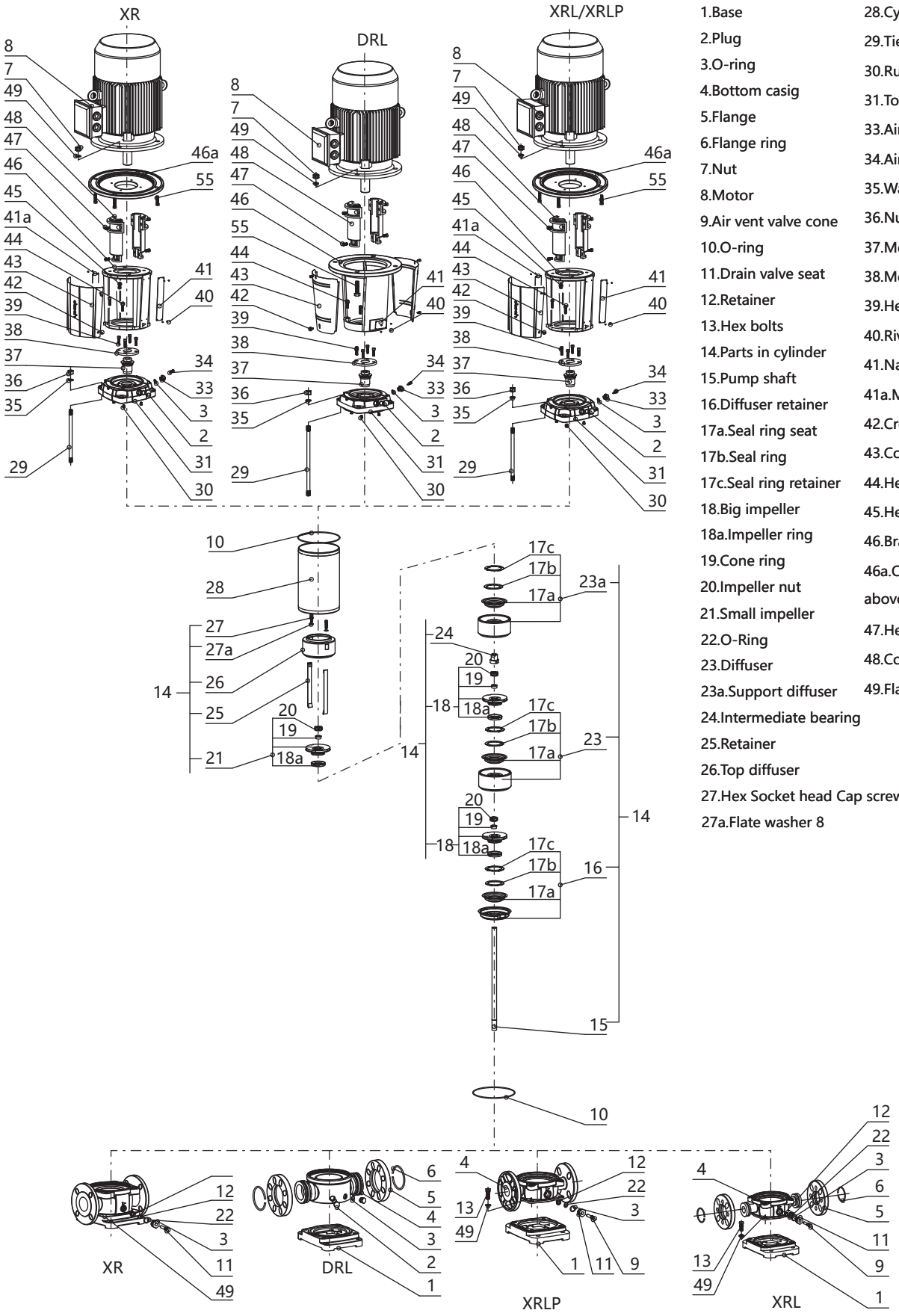

1.Base
2.Plug
3.O-ring
4.Bottom casig
5.Flange
6.Flange ring
7.Nut
8.Motor
9.Air vent valve cone
10.O-ring
11.Drain valve seat
12.Retainer
13.Hex bolts
14.Parts in cylinder
15.Pump shaft
16.Diffuser retainer
17a.Seal ring seat
17b.Seal ring
17c.Seal ring retainer
18.Big impeller
18a.Impeller ring
19.Cone ring
20.Impeller nut
21.Small impeller
22.O-Ring
23.Diffuser
23a.Support diffuser
24.Intermediate bearing
25.Retainer
26.Top diffuser
27.Hex Socket head Cap screw M8*30
27a.Flate washer 8
28.Cylinder
29.Tie rod
30.Rubber spring
31.Top casing
33.Air vent valve seat
34.Air vent valve core
35.Washer16
36.Nut M16
37.Mechanical seal
38.Mechanical Seal Cover
39.Hex Socket head Cap screw
40.Rivet
41.Name plate
41a.Model mark
42.Cross recessed bolt
43.Coupling cover
44.Hex Socket head Cap screw
45.Hex Socket head Cap screw
46.Bracket
46a.Over flange(Power above 11kW)
47.Hex Socket head Cap screw
48.Coupling
49.Flate washer

● 15 Picture 4 Exploded view for Model XR/XRL/XRLP 95~255

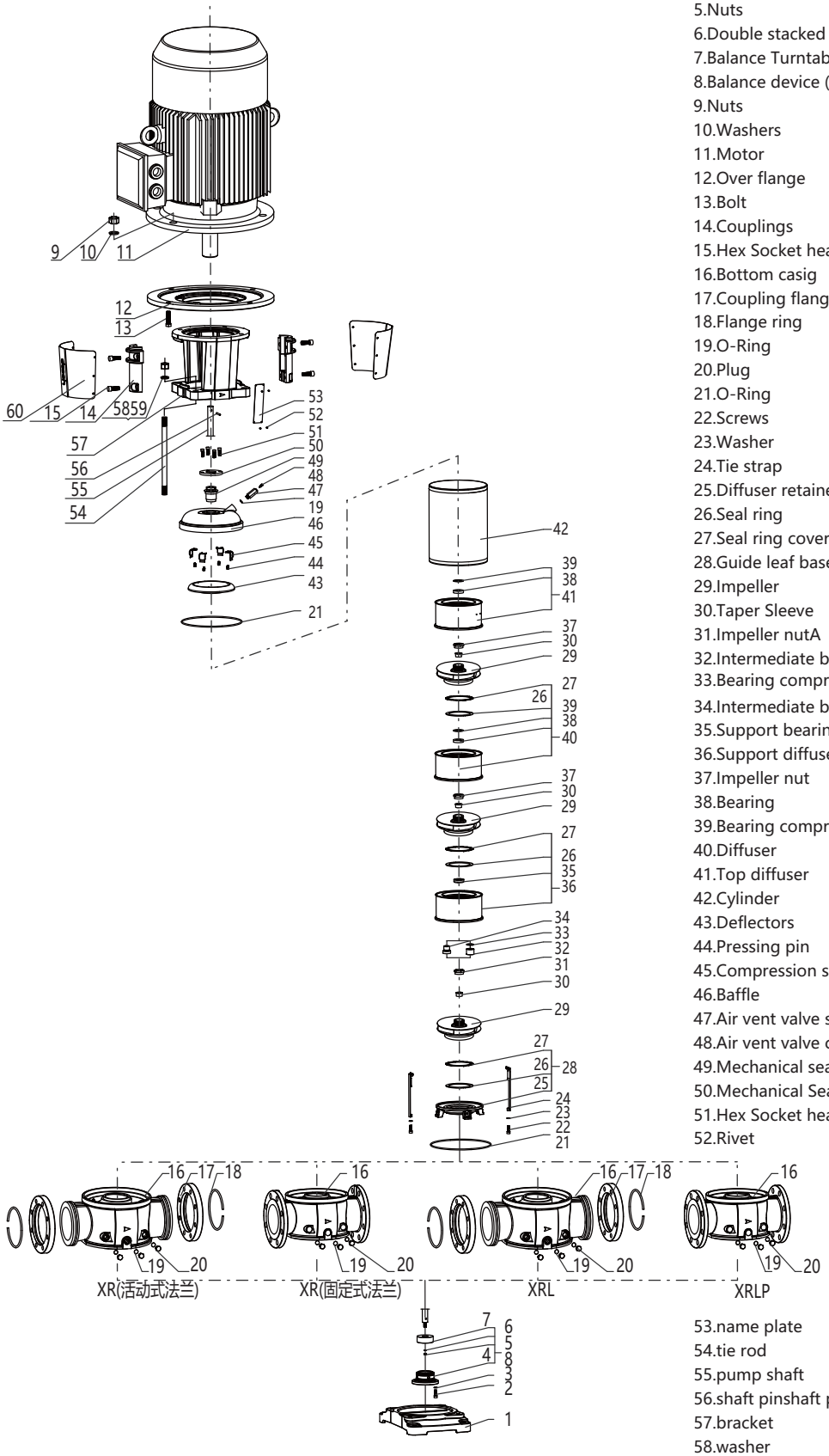

1.Base
2.Hex Socket head Cap screwM10*30
3.Washer10
4.Balance base
5.Nuts
6.Double stacked self-locking shims
7.Balance Turntable
8.Balance device (75kw and above power use)
9.Nuts
10.Washers
11.Motor
12.Over flange
13.Bolt
14.Couplings
15.Hex Socket head Cap screw
16.Bottom casig
17.Coupling flange
18.Flange ring
19.O-Ring
20.Plug
21.O-Ring
22.Screws
23.Washer
24.Tie strap
25.Diffuser retainer
26.Seal ring
27.Seal ring cover
28.Guide leaf base
29.Impeller
30.Taper Sleeve
31.Impeller nutA
32.Intermediate bearing（For 125~185 pumps）
33.Bearing compression ring（For 125~185 pumps）
34.Intermediate bearing（For 95 pumps）
35.Support bearing
36.Support diffuser
37.Impeller nut
38.Bearing
39.Bearing compression ring
40.Diffuser
41.Top diffuser
42.Cylinder
43.Deflectors
44.Pressing pin
45.Compression spring
46.Baffle
47.Air vent valve seat
48.Air vent valve core
49.Mechanical seal
50.Mechanical Seal Cover
51.Hex Socket head Cap screw
52.Rivet
53.name plate
54.tie rod
55.pump shaft
56.shaft pinshaft pin（55kW and above motor use）
57.bracket
58.washer
59.Nuts
60.coupling cover